Southshore Behavioral Health

Project Aerial View

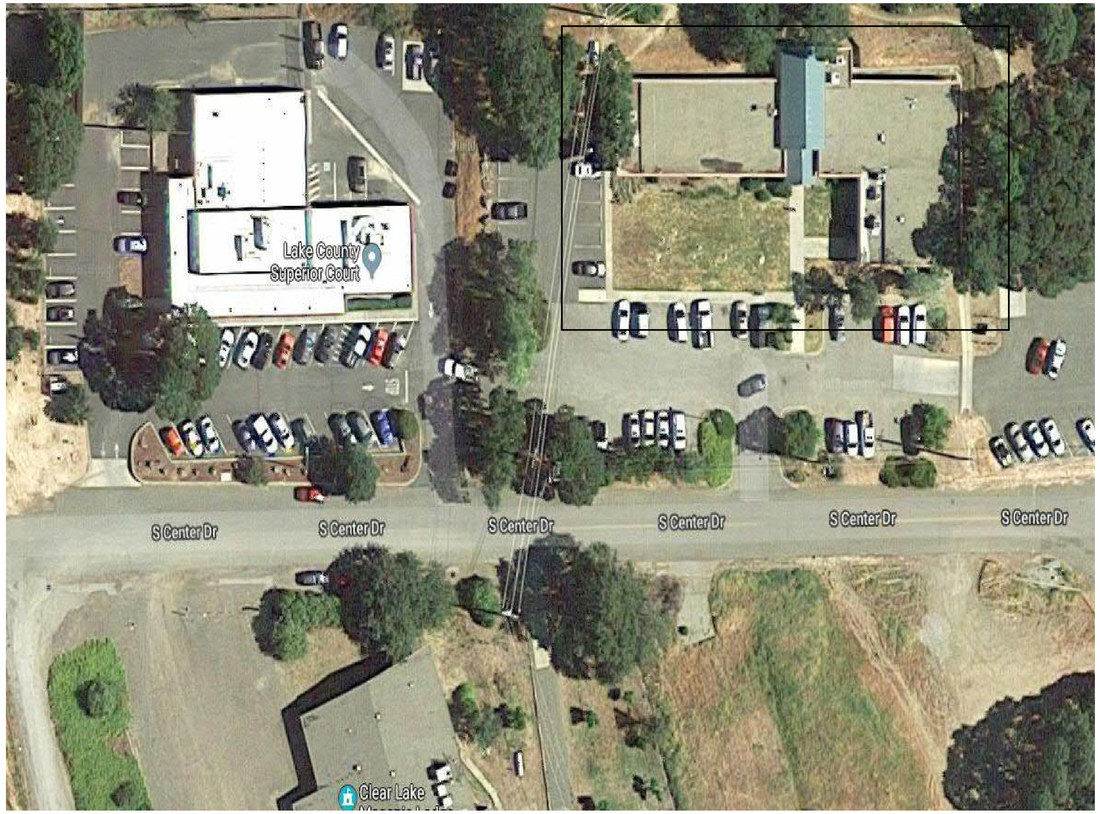

Location Map

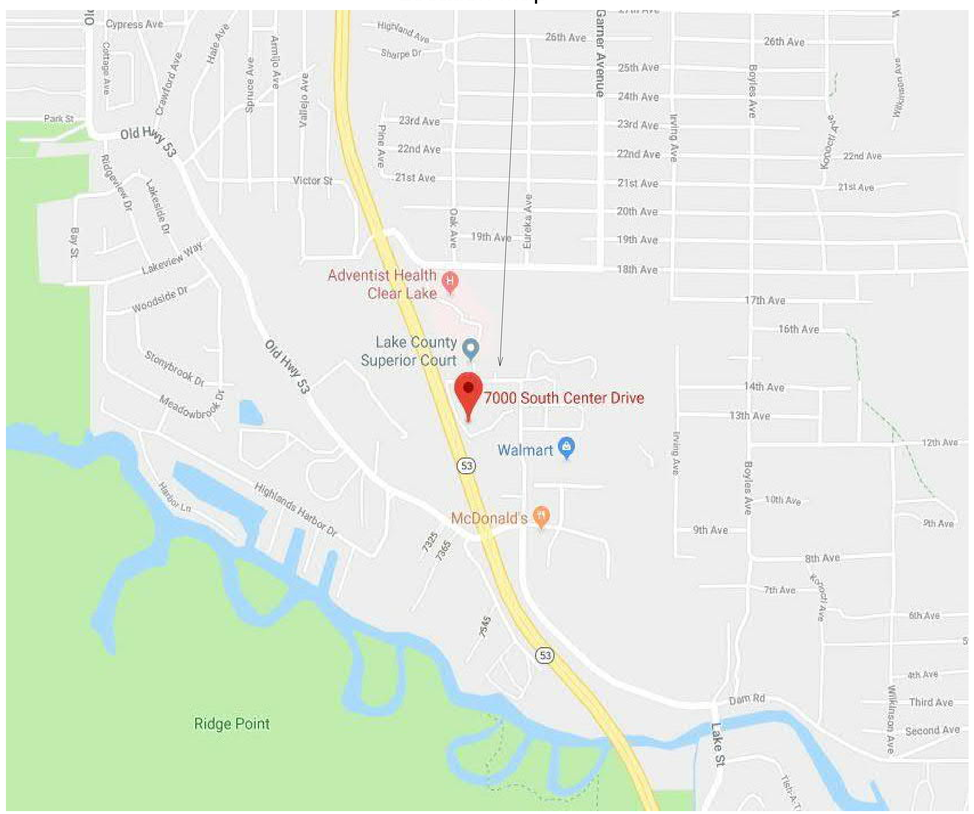

County of Lake
Southshore Behavioral Health
Building B, 7000 S Center Dr
Clearlake, California 95422

No.	Description	Date
1	Revision	01/23/19

County of Lake
Southshore Behavioral Health

Cover

Project number	Project Number
Date	01/23/2019
Drawn by	RJR
Checked by	VH

A100

Scale

6/4/2023 12:41:52 PM

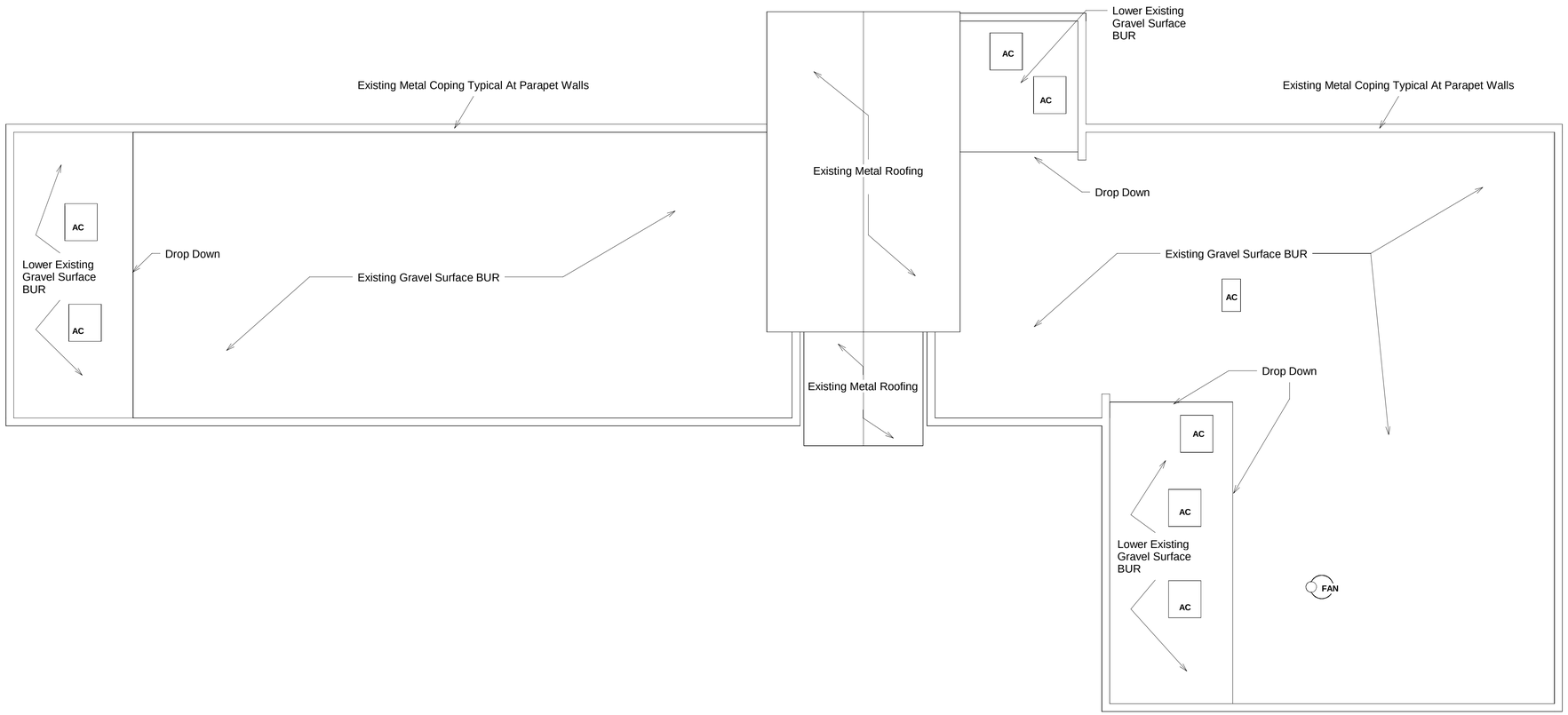

1 Existing Roof Plan
1/8" = 1'-0"

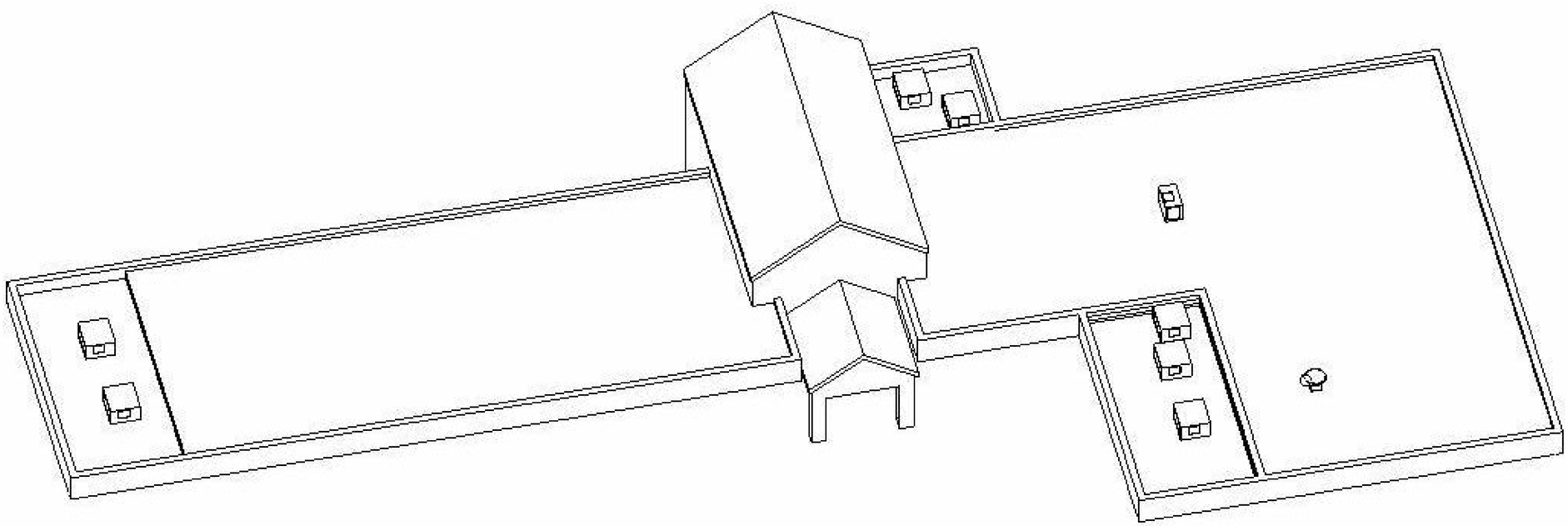

County of Lake
Southshore Behavioral Health
Building B, 7000 S Center Dr
Clearlake, California 95422

No.	Description	Date
1	Revision	01/23/19

County of Lake
Southshore Behavioral Health

Demo Roof Plan

Project number	Project Number
Date	01/23/2019
Drawn by	RJR
Checked by	VH

A200

Scale	1/8" = 1'-0"

6/4/2023 12:41:52 PM

1 New Roof Plan
1/8" = 1'-0"

County of Lake
Southshore Behavioral Health
Building B, 7000 S Center Dr
Clearlake, California 95422

No.	Description	Date
1	Revision	01/23/19

County of Lake
Southshore Behavioral Health

New Roof Plan

Project number	Project Number
Date	01/23/2019
Drawn by	RJR
Checked by	VH

A300

Scale	1/8" = 1'-0"

6/4/2023 12:41:52 PM

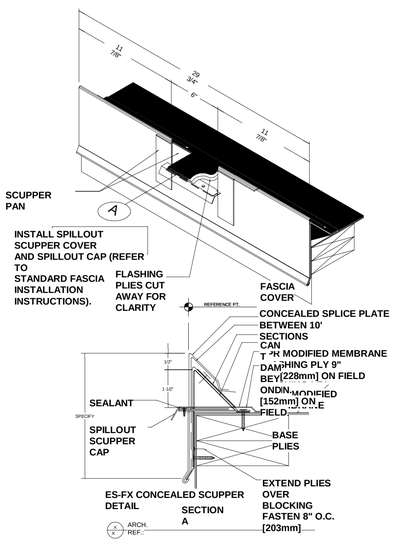

1 Fascia Scupper Detail
N.T.S.

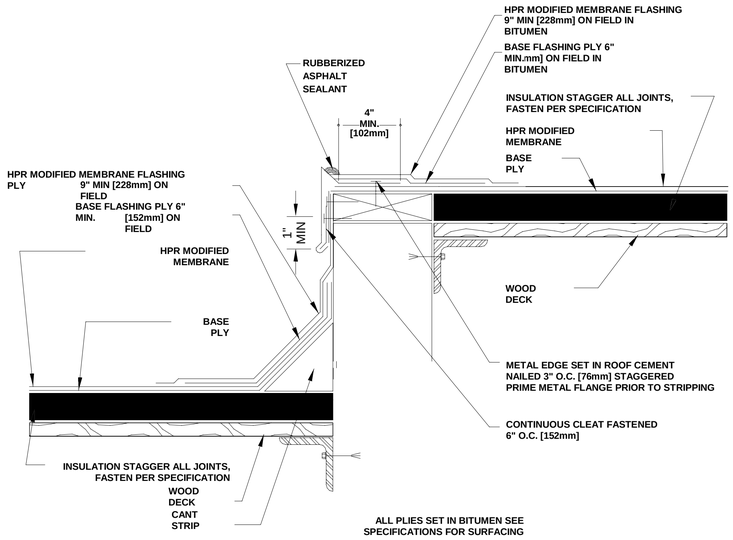

2 Upper To Lower Roof Detail
N.T.S.

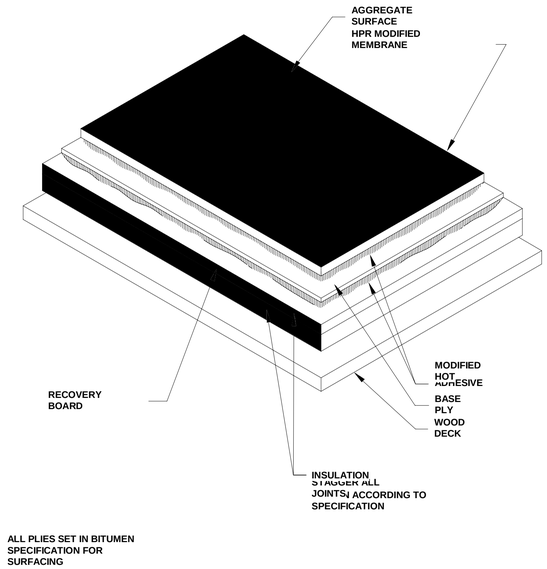

3 Typical Section Gravel Finish
N.T.S.

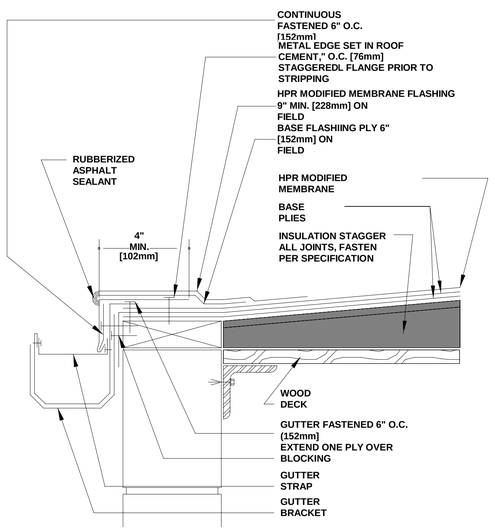

ALL PLIES SET IN MODIFIED COLD ADHESIVE
SEE SPECIFICATIONS FOR SURFACING

4 Roof Edge With Gutter
N.T.S.

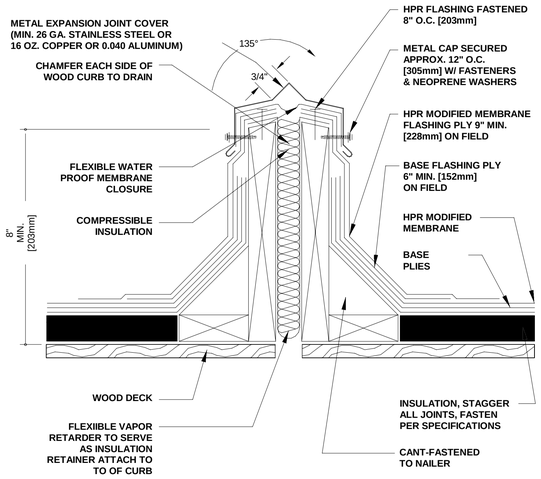

ALL PLIES SET IN MODIFIED COLD ADHESIVE
SEE SPECIFICATIONS FOR SURFACING

5 Expansion Joint Alternate
N.T.S.

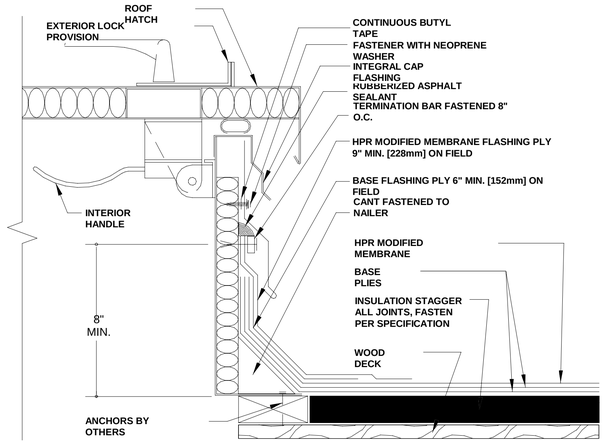

ALL PLIES SET IN MODIFIED COLD ADHESIVE
SEE SPECIFICATIONS FOR SURFACING

6 Hatch
N.T.S.

County of Lake
Southshore Behavioral Health
Building B, 7000 S Center Dr
Clearlake, California 95422

No.	Description	Date
1	Revision	01/23/19

County of Lake
Southshore Behavioral Health

BUR Roof Details

Project number	Project Number
Date	01/23/2019
Drawn by	RJR
Checked by	VH

A400

Scale	As indicated

6/4/2023 12:41:53 PM

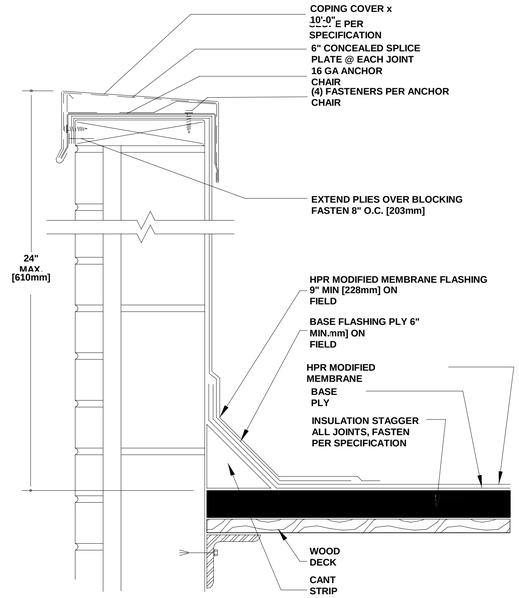

ALL PLIES SET IN BITUMEN SEE
SPECIFICATIONS FOR SURFACING

1 Coping Cap Detail
12" = 1'-0"

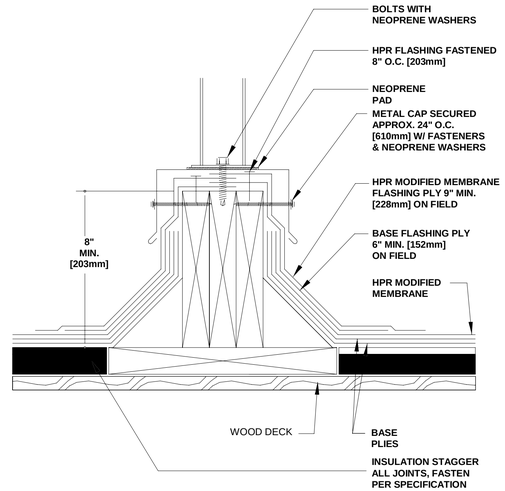

ALL PLIES SET IN MODIFIED COLD ADHESIVE
SEE SPECIFICATIONS FOR SURFACING

2 Equipment Support
N.T.S.

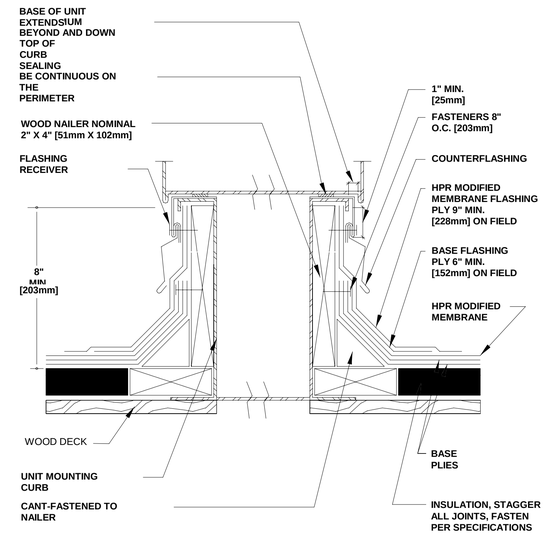

ALL PLIES SET IN MODIFIED COLD ADHESIVE
SEE SPECIFICATIONS FOR SURFACING

3 Curb Detail Air Handling Station (1)
12" = 1'-0"

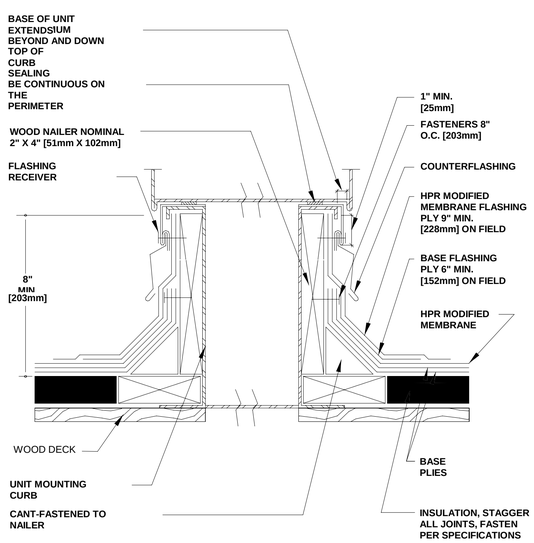

ALL PLIES SET IN MODIFIED COLD ADHESIVE
SEE SPECIFICATIONS FOR SURFACING

4 Curb Detail Air Handling Station
12" = 1'-0"

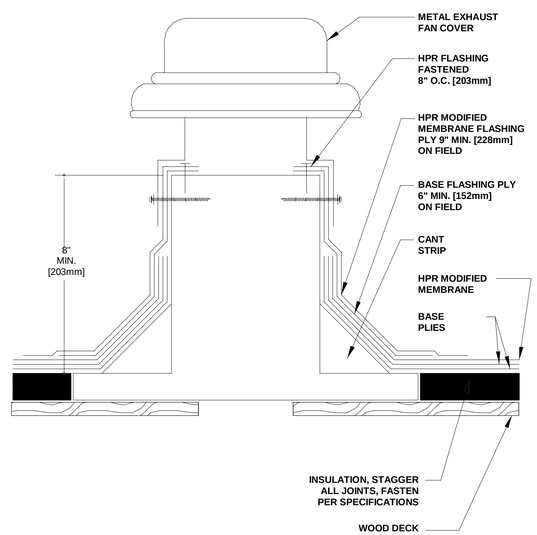

ALL PLIES SET IN MODIFIED COLD ADHESIVE
SEE SPECIFICATIONS FOR SURFACING

5 Exhaust Fan Detail
N.T.S

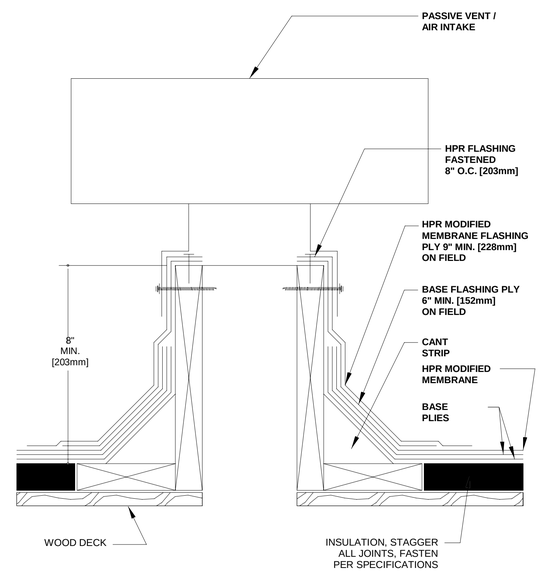

ALL PLIES SET IN MODIFIED COLD ADHESIVE
SEE SPECIFICATIONS FOR SURFACING

6 Passive Vent Air Intake
N.T.S.

County of Lake
Southshore Behavioral Health
Building B, 7000 S Center Dr
Clearlake, California 95422

No.	Description	Date
1	Revision	01/23/19

County of Lake
Southshore Behavioral Health

BUR Roof Details

Project number	Project Number
Date	01/23/2019
Drawn by	RJR
Checked by	VH

A401

Scale 12" = 1'-0"

6/4/2023 12:41:53 PM

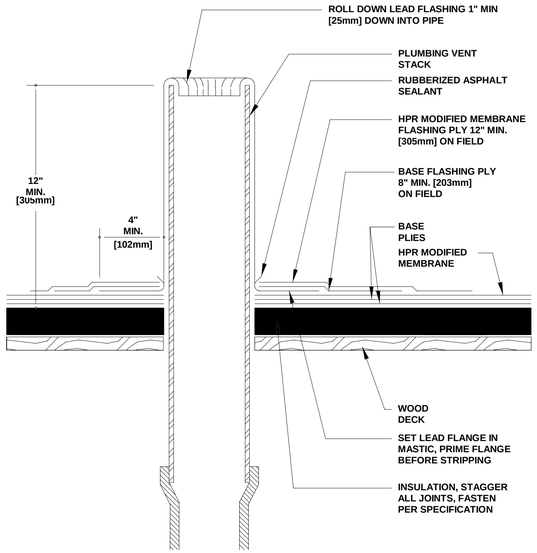

ALL PLIES SET IN MODIFIED COLD ADHESIVE
SEE SPECIFICATIONS FOR SURFACING

1 Plumbing Stack
N.T.S

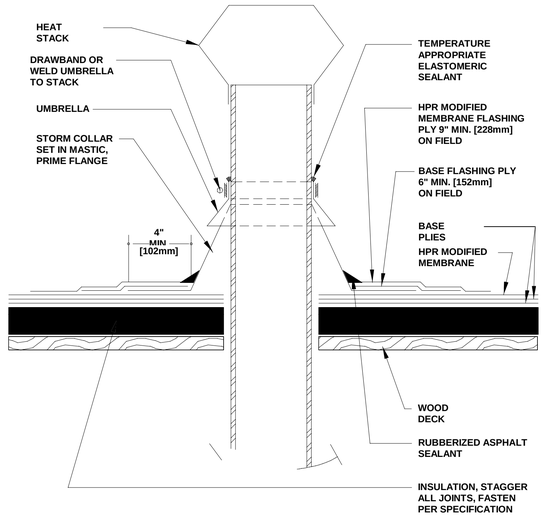

ALL PLIES SET IN MODIFIED COLD ADHESIVE
SEE SPECIFICATIONS FOR SURFACING

2 Heat Stack
N.T.S.

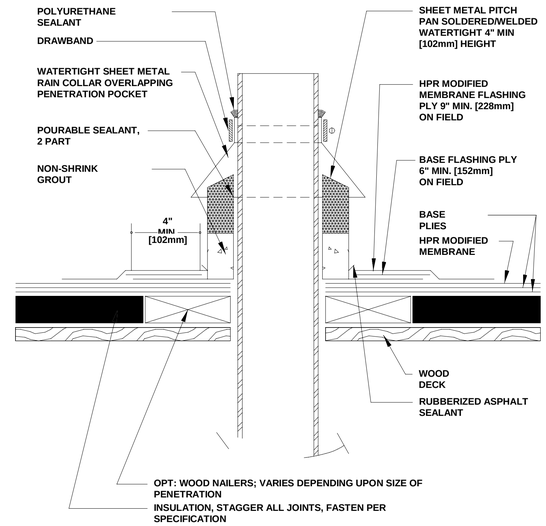

ALL PLIES SET IN MODIFIED COLD ADHESIVE
SEE SPECIFICATIONS FOR SURFACING

3 PitchPocket With Umbrella
N.T.S.

County of Lake
Southshore Behavioral Health
Building B, 7000 S Center Dr
Clearlake, California 95422

No.	Description	Date
1	Revision	01/23/19

County of Lake
Southshore Behavioral Health

BUR Roof Details

Project number	Project Number
Date	01/23/2019
Drawn by	RJR
Checked by	VH

A402

Scale	N.T.S.

6/4/2023 12:41:53 PM

R-Mer Loc Data Sheet

1 Drafting 2
6" = 1'-0"

County of Lake
Southshore Behavioral Health
Building B, 7000 S Center Dr
Clearlake, California 95422

No.	Description	Date
1	Revision	01/23/19

County of Lake
Southshore Behavioral Health

Metal Roof Details

Project number	Project Number
Date	01/23/2019
Drawn by	RJR
Checked by	VH

A500

Scale 6" = 1'-0"

6/4/2023 12:41:53 PM

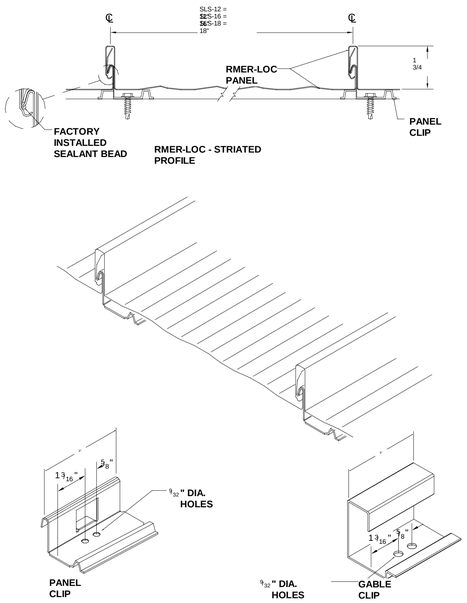

1 R Mer Loc Data Sheet Striated Profile
N.T.S.

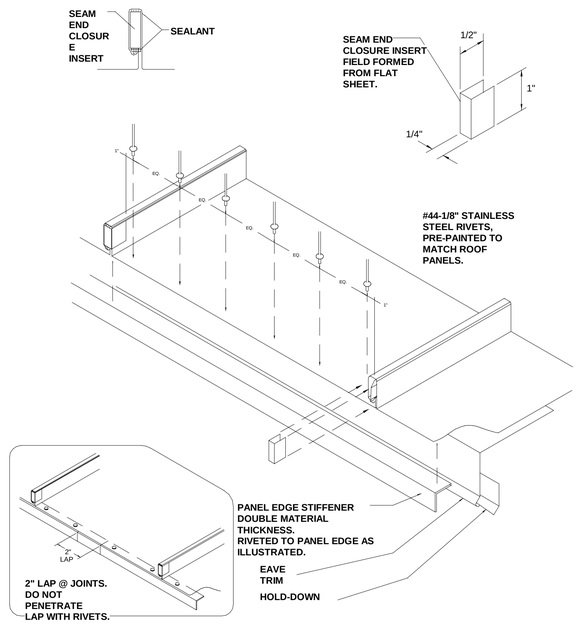

3 R Mer Loc Eave Assembly Detail
N.T.S.

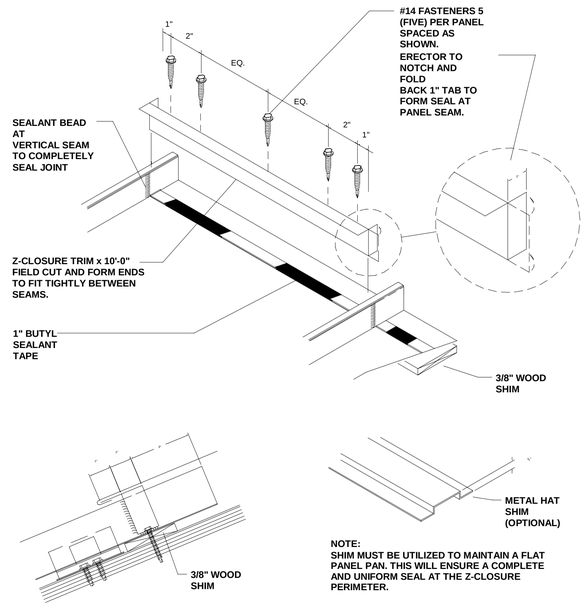

4 R Me r Loc Fixed Panel Detail
N.T.S.

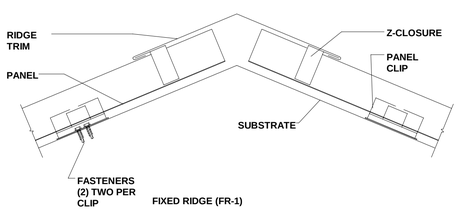

2 R Mer Loc Fixed Ridge Detail
N.T.S.

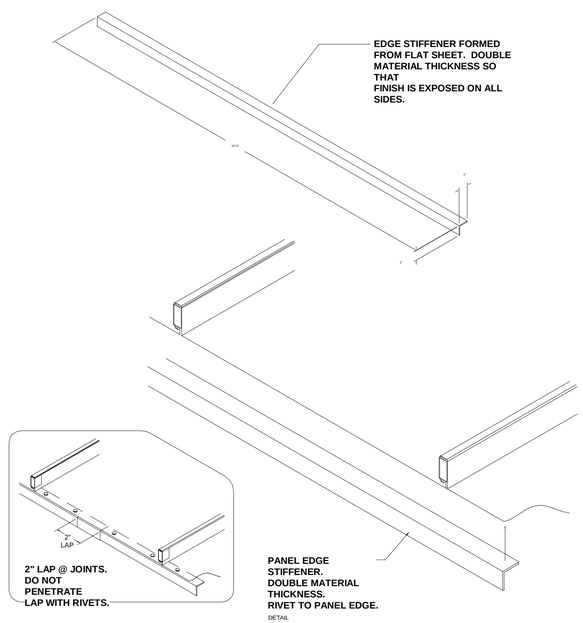

6 R Mer Loc Edge Stiffener Standard Panel System
N.T.S.

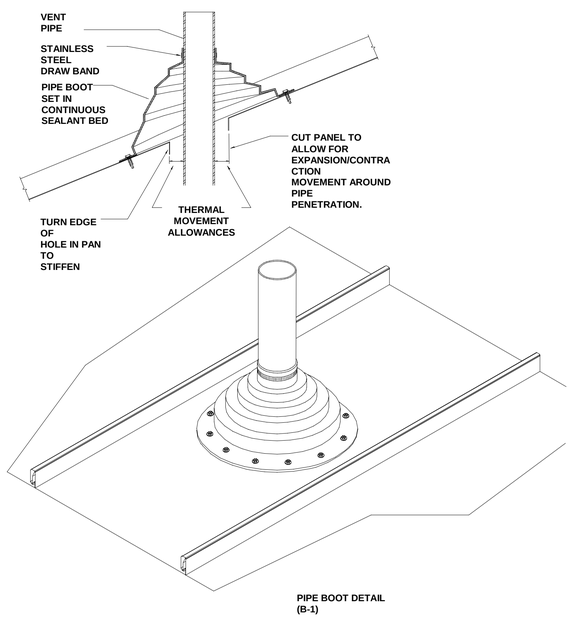

5 R Mer Loc Pipe Boot Detail B 1
N.T.S.

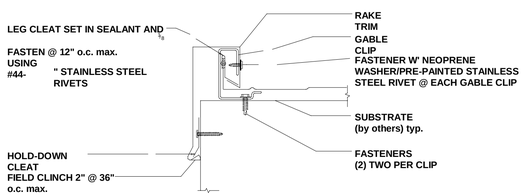

7 R Mer Loc Rake W Leg Cleat R Mer1 Rake W Vert Panel RV 1
N.T.S.

County of Lake
Southshore Behavioral Health
Building B, 7000 S Center Dr
Clearlake, California 95422

No.	Description	Date
1	Revision	01/23/19

County of Lake
Southshore Behavioral Health

Metal Roof Details

Project number	Project Number
Date	01/23/2019
Drawn by	RJR
Checked by	VH

A501

Scale N.T.S.

6/4/2023 12:41:54 PM